ISSN: 2637-6067 DOI: 10.6918/IJOSSER.202002_3(2).0008

Study and Application of Inclined Tube Settlement Filtration System

Kun Chen[1, a], He Zhang[1]

[1]School of Southwest Petroleum University, Chengdu city 610500, China.

[a]MAME1095954607@qq.com

Abstract

At present, solid-liquid separation technology is widely used in all walks of life, among which, the inclined tube settlement device has the characteristics of large treatment capacity, small occupation area, etc., which can effectively solve the problems of sewage with large miscellaneous mass and high water demand, which often causes the filter element fouling in the current desalination process. Based on the study of the separation principle of inclined tube settlement, this paper used Fluent software to build the simulation model, and then optimized the structural parameters under the conditions of different inclined tube lengths and Angle, so as to find the optimal structural parameters of inclined tube settlement device. Through the optimization results of inclined tube settling device, the inclined tube settling filtration system is built, which provides an important theoretical basis for the design of sewage pre-filtration equipment in various industries.

Keywords

Solid-liquid separation; Inclined tube settling; Filtration system; Fluent software; Parameter optimization.

1. Introduction

The inclined tube sedimentation tank USES the principle of shallow precipitation to shorten the distance of particle settling and increase the precipitation area of the sedimentation tank, thus improving the precipitation processing efficiency. Compared with other traditional solid-liquid separators, the inclined tube precipitator has the advantages of simple structure, low input, large processing capacity and high efficiency. But at present, the design parameters of inclined tube sedimentation tank are usually determined according to theory and experience, which makes the parameters of inclined tube sedimentation tank under different working conditions not reach the optimal conditions. The study with the help of Fluent software, several conditions of different structural parameters of inclined plate settler device simulation, establish high level under the load of the optimal inclined tube parameters such as length, Angle, and calculated under various working conditions of precipitation efficiency, thus compared to determine the best value of each parameter, the final cad flocculant closed-loop automatic adding device, the experimental measurement and system optimization.

2. Process Flow and Numerical Simulation of Inclined Tube Edimentation Tank

Process flow of inclined tube sedimentation tank: the inlet 1 is connected with the automatic dosing device, and the sewage mixed with coagulant enters the inclined tube sedimentation tank through the inlet 1. The sewage is fully mixed with flocculant through the flocculation channel 6, and some impurities are discharged through the sewage outlet 2 after natural

ISSN: 2637-6067 DOI: 10.6918/IJOSSER.202002_3(2).0008

precipitation in the flocculation channel 6. The remaining liquid enters the settlement area through the bottom of the flocculation channel. After being acted on by the inclined pipe 4, the impurities flocculate and settle to the bottom, and then discharge through the outlet 3. After precipitation, the clean water passes through the outlet 5 and enters the next technological process of water treatment. The structure diagram of inclined tube precipitation device is shown in figure 1.

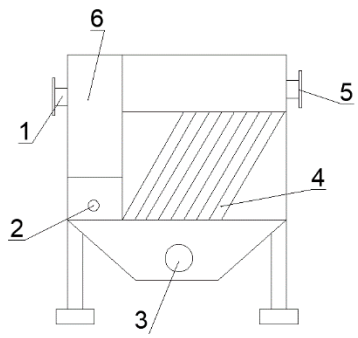

Fig 1. Structure diagram of inclined tube precipitation device

The turbulence model and the system resources required for calculation are considered. The mixture model in the multiphase flow model (the first term is for fluid, the second term is for particles) was used in the numerical simulation, and the standard k- model was selected for the turbulence model (the equations for turbulent kinetic energy k and dissipation rate were introduced).

3. Numerical Simulation Results and Analysis

3.1. Simulation Analysis of Inclined Pipe Length

At present, the length of inclined tube used in inclined tube sedimentation tank is not consistent. However, whether it is used in the reconstruction of existing structures such as inclined tube sedimentation tank or clarifying tank, if the length of the inclined tube can be shortened or its structural parameters can be changed to reduce the height of the tank under the premise of ensuring the separation effect, the water distribution head can be saved and energy consumption can be reduced.

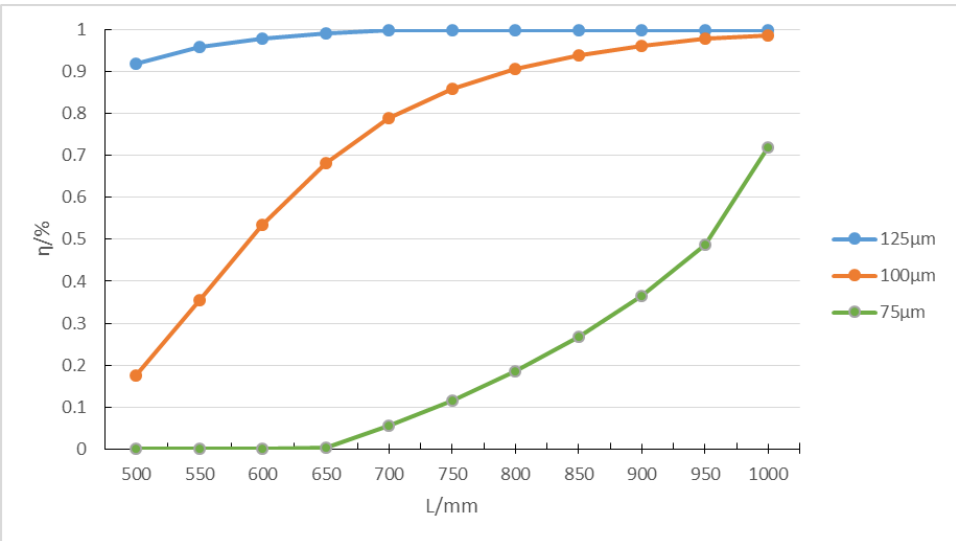

Fig 2. Effect of inclined tube length L on precipitation efficiency

ISSN: 2637-6067 DOI: 10.6918/IJOSSER.202002_3(2).0008

In this group of simulation experiments, oblique tube inclination Angle was 60°, tube spacing was 30mm, particle diameter was 75μm, 100μm, 125μm, and surface load was 15m/h. In the range of 500-1000mm long of inclined tube plate, the comparison experiment was conducted to change the length of inclined tube. The experimental results are shown in figure 2.

As can be seen from figure 2, when the particle diameter is 125μm, the particle precipitation efficiency tends to be 100%, and the large particle impurities basically settle at the bottom of the device by gravity before entering the inclined pipe. When the particle diameter is 100μm, the length of the inclined tube is increased within a certain range, and the separation efficiency is improved rapidly. With the increase of the length of the inclined tube, the increase rate of the end separation efficiency is decreased. Therefore, when the particle diameter is more than 100μm, a higher precipitation efficiency can be achieved when the inclined tube length is 800mm. When the particle diameter is 75μm, the length of the inclined tube should be 1000mm to further improve the precipitation efficiency by increasing the length of the inclined tube.

3.2. Optimization Analysis of Inclined Pipe Angle

In the design of inclined tube settler, inclined tube inclination Angle is a very important parameter, which not only affects the effective settlement area of inclined tube in the process of particle settlement, but also affects the slime effect of particle settlement on inclined tube. The inclined Angle of the inclined pipe is too small, and the sliding force of particles cannot overcome the corresponding help, which is not conducive to particle settlement. The inclined Angle of inclined tube is too large, which reduces the effective precipitation area of inclined tube and the precipitation efficiency of inclined tube.

In this group of simulation experiments, inclined tube plate length is 800mm, 1000mm, tube spacing is 30mm, particle diameter is 75μm, 100μm, 125μm, surface load is 15m/h, in the range of Angle of inclined tube 30°-70°, the comparison experiment of changing Angle of inclined tube. The experimental results are shown in figure 3.

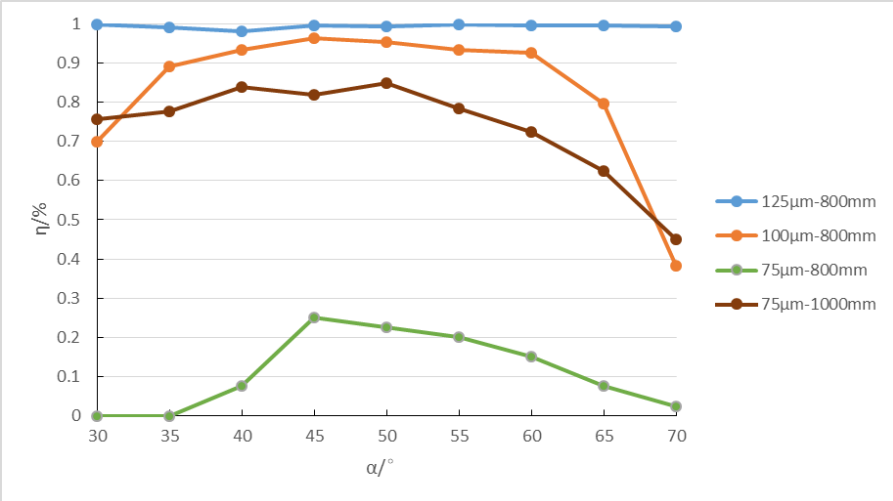

Fig 3. Influence of Angle variation of inclined tube on precipitation efficiency

As can be seen from figure 3, when the particle diameter is 125μm, most of the particles can settle naturally at the bottom of the inclined tube, which is consistent with the previous verification conclusion. When the particle diameter is 100μm and the Angle of inclined tube is less than 40°, the precipitation efficiency increases with the increase of inclined Angle. When the Angle of inclined tube is greater than 60°, the precipitation efficiency decreases significantly with the increase of inclined Angle. When the particle diameter is 75μm and the Angle of inclined tube is less than 40°, the precipitation efficiency is lower. When the Angle of inclined

ISSN: 2637-6067 DOI: 10.6918/IJOSSER.202002_3(2).0008

tube is 45°-60°, the precipitation efficiency of inclined tube is larger. When the Angle of inclined tube is greater than 60°, the precipitation efficiency decreases significantly with the increase of inclined Angle. Considering the influence of the slip property of the inclined pipe, the inclined pipe is designed to be 60° in general. For the conditions with large sewage treatment capacity, the sedimentation tank with double-layer inclined tube can be designed. The inclination of the inclined tube in the precipitation area of the designed inclined tube sedimentation tank is 45°, and the inclination of the inclined tube in the mud discharge area is 60°.

4. Experimental Verification

Based on the simulation analysis results of Fluent, the experimental scheme platform as shown in figure.4 was built to verify the precipitation effect of the inclined tube precipitation filtration system.

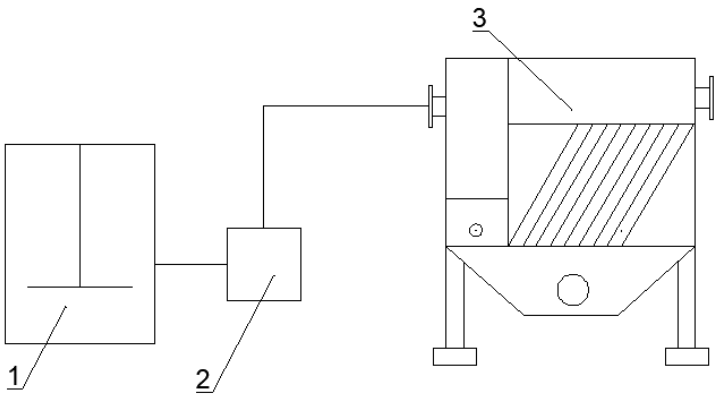

1- Mixing device, 2- automatic dosing device, 3- inclined tube settling device

Fig 4. Diagram of experimental equipment

The experimental platform mainly includes: inclined tube settling device, automatic dosing device, stirring device and so on. Among them, the automatic dosing device mainly includes: flocculant stirring device, dosing tank level meter, dosing pump, PLC control unit, turbidity meter, etc. The water quality at the outlet is detected by the turbidity meter and fed back to the control unit so as to adjust the frequency converter and automatically control the dosing amount, thus completing the design of the inclined tube settlement filtration system. The experimental results are shown in figure 5.

Fig 5. Experimental effect diagram

ISSN: 2637-6067 DOI: 10.6918/IJOSSER.202002_3(2).0008

By comparing the inlet and outlet water quality of the inclined tube settling device, it can be seen that the system has a good effect on the water quality, and the outlet water is clear, which meets the requirements of preprocessing.

5. Conclusion

In this paper, based on the numerical simulation of Fluent software, inclined tube sedimentation tank are analyzed the influence of different structural parameters on the precipitation efficiency, and to determine the amount of on sewage processing large inclined tube sedimentation tank under the actual condition of the optimal design parameters and range, contrast analysis found that the optimization of the separation efficiency of inclined tube settler effect is significantly better than any other normal gravity settler. It provides an important theoretical basis for guiding the design of sewage pre-filtration treatment equipment in various industries.

(1) the settlement precision of inclined tube settlement device for particles reached about 100 m, and the precipitation efficiency increased with the increase of inclined tube plate length. When the tube length reached 800mm, the influence of tube length on precipitation efficiency gradually decreased.

(2) considering the precipitation efficiency and slime performance of the actual inclined pipe comprehensively, the inclined pipe Angle can achieve a higher precipitation efficiency at 40°-60°, and the actual situation can be considered comprehensively according to the sediment concentration of the mixture.

At present, the simulation of inclined tube settling pool is still based on certain assumptions, and particle shape and aggregation are still affected by many factors under actual conditions, which need to be further verified by field experiments.

References

[1] Hongjun Dong. Design parameter test of inclined pipe in eddy current clarifier based on FLUENT [D]. East China jiaotong university,2013.

[2] Zuliang Liao,Rongguang Liu. Experimental study on precipitation efficiency and inclined length of inclined tube [J]. Journal of chongqing university of architecture and engineering, 1993,15 (4) : 45-51.

[3] Guorong Sheng. Study on some problems of pipe length of inclined tube sedimentation tank. Master's thesis, chongqing jianzhu university, 1996.

[4] Zhilang Yang,Wenwen Huang,Yangyang Zhou. Flow field simulation analysis of reciprocating separator flocculation pool based on computational fluid dynamics [J]. Water supply and drainage, 2009,35 (S2) : 365-368.

[5] Tinglin Huang,Yuxian Li, Wenjie He et al. Theoretical analysis of structural parameter optimization of inclined tube sedimentation tank [J]. Water supply and drainage, 2007,33 (4) : 20-26.