Natural Gas Water and Water Content Detection Comprehensive Platform

Wei Miao[1, a], Qiyu Liu[1, b], Miaoshun Li[1, c]

[1]School of Shandong University of Science and Technology, Guangzhou 510000, China.

[a]1351218987@qq.com, [b]1070089885@qq.com, [c]1101947185@qq.com

Abstract

As a clean energy with high calorific value and no pollution, natural gas can increase its proportion in the energy structure, which can greatly reduce air pollution, improve the environment and save energy. In order to remove the moisture in natural gas efficiently, a comprehensive platform device for natural gas water removal and moisture content detection is designed. It does not need to consume other energy in the whole process of natural gas removal. The equipment is simple and reliable, and can be separated in the case of no moving pipeline or non-stopping. The water removal reagent is replaced to improve the water removal efficiency, and the moisture content of the gas to be tested can be detected in time, and the result is directly obtained. The detection cycle is short, the precision is high, and the implementation is convenient.

Keywords

Natural gas, No moving pipe, Water removal reagent, High precision.

1. Design Ideas

The comprehensive platform for natural gas water removal and moisture content detection mainly consists of natural gas inlet device, natural gas water removal device and natural gas exhaust device. The core component of the natural gas inlet device is a jet vortex atomization device, which atomizes the moisture contained in the natural gas into droplets of extremely small diameter, which is more easily absorbed by the water removal agent and improves the water removal efficiency[1]. The natural gas water removal device uses white anhydrous copper sulfate powder as a water removal reagent, and the natural gas atomized by the air inlet device enters the water removal device, and is controlled by the differential pressure and the staggered ventilating plate from the top to the bottom and the water removal reagent. The white anhydrous copper sulfate powder reacts to remove moisture. The natural gas that has been dewatered is discharged into the gas pipeline through the outlet pipe connected to the lower part of the water removal device. In order to ensure timely removal of reagents to ensure water removal efficiency, a wireless automatic wavelength detector is arranged outside the bottom of the water removal device. When the wavelength is changed to 460 nm, an alarm is issued to remind the staff that the water removal reagent is about to react completely, and the intake air needs to be closed in time. Channel and replace reagents. The water content detection function is realized by the flow sensor installed in the intake pipe, the timer recording flow rate Q and the time difference Δt before and after the reaction, and the collected flow rate Q, time difference Δt, and water removal agent mass m are transmitted to the data collection. The processing unit derives the mass m1 of H2O from the complete reaction mass ratio of CuSO4 and H2O, and m1/Q*Δt is the moisture content of the gas[2].

2. Design Content

The main research contents of the integrated platform for natural gas water removal and moisture content detection are the atomization characteristics of the jet vortex atomization device and the influencing factors and the structural design of the water removal device.

The jet vortex atomization device is composed of a jet cavity, a guiding cavity, a vortex device and an atomizing nozzle, as shown in FIG. 1 below. The main factors affecting the atomization effect of the jet vortex atomization device are the jet nozzle shrink angle, the spiral lead of the vortex device, the spiral guide fin cross-sectional shape, the spiral length, the helix angle and the number of spiral heads, and the atomizing nozzle shrinks[3]. Angle and so on. The parameters of the whole device are many, in order to achieve the maximum atomization effect, it is necessary to optimize the main parameters involved to determine the optimal solution.

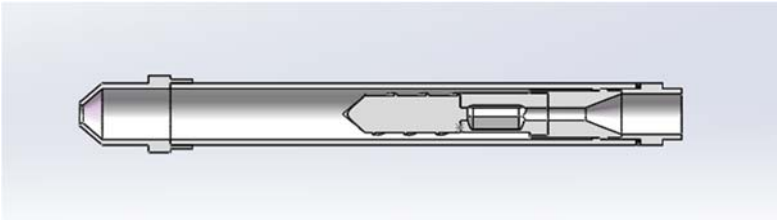

Fig 1. Jet vortex atomization device

The structure of the water removal device is shown in Figure 2 below. It is necessary to ensure three points during the design: First, the natural gas after atomization can be smoothly removed from the top and bottom with the water removal reagent to avoid the formation of helium; When the response is complete, the staff can be notified and replaced in time; Third, the rapid replacement of the reagent can be completed without moving the column.

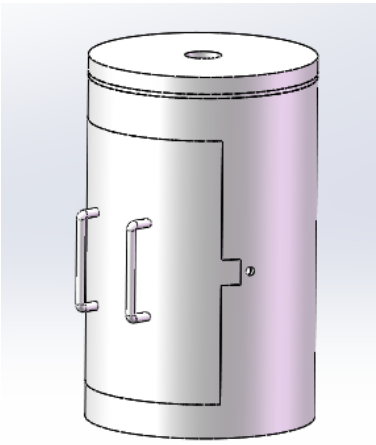

Fig 2. Water removal device

3. Implementation Plan

The natural gas dewatering and moisture content detection integrated platform forms a complete system with other external structures in the actual working process, as shown in Figure 3 below.

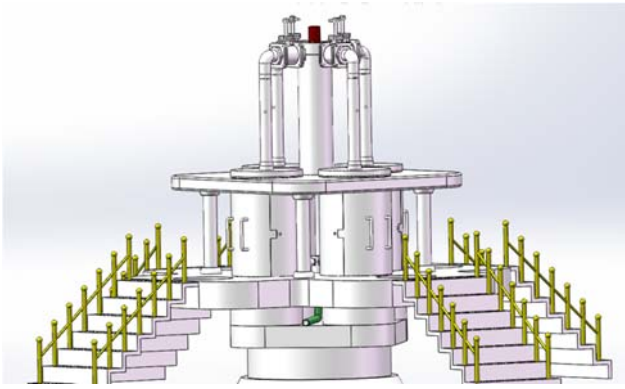

Fig 3. Natural gas dewatering and moisture content detection integrated platform working system

Step 1: Intake

The natural gas extracted from the bottom of the well is transported to the natural water removal and moisture content detection platform through the intake five-way pipe to carry out water removal operations. Ball valves are installed at the four natural gas outlets of the five-way pipe to control whether the gas enters the comprehensive platform for natural gas water removal and moisture content detection[4].

Step 2: Remove water

The water-containing natural gas is first atomized by the jet vortex device of the natural gas water removal and moisture content detection platform, and the atomized gas enters the natural gas water removal device, and the gas is guided from the pressure difference and the staggered ventilating plate from top to bottom. Reacts with the water removal reagent to remove moisture.

Step 3: Exhaust

The reacted gas is discharged through the exhaust pipe of the bottom side of the natural gas device through the exhaust five-way pipe, and then the entire natural gas water removal process is completed.

Step 4: Monitoring and replacement of water removal reagents

In the process of removing water, the wireless automatic wavelength detector located outside the bottom of the water removal device monitors the change of wavelength in real time, and gives an alarm when the wavelength becomes 460nm, reminding the staff that the water removal reagent is about to complete the reaction, then shutting down the natural gas first. The ball valve at the intake of the water and moisture detection integrated platform, cut off the entry of natural gas, and then close the ball valve at the exhaust to avoid natural gas leakage and air in the process of replacing the reagents. Finally, open the external side of the natural gas water removal device and open the door. The reagent drum containing anhydrous copper sulfate is removed to the vertical vertical channel, and the new and old reagents are replaced by the hydraulic lifter at the lower part. After the replacement of the water removal reagent is completed, the balloon valve is opened, and then the ball valve at the exhaust valve is opened to perform the natural gas removal operation again[5].

To realize the natural gas moisture content detection function, it is only necessary to open one intake pipeline. After entering the balloon valve, a flow sensor and a timer are respectively set to record the gas flow and the time difference Δt before and after the reaction, and transmit it to the data processing center for calculation. The total volume of gas in the water removal device is V, $V = Q * \Delta t$. When m grams of anhydrous copper sulfate is completely reacted, the mass m1 of H_2O is calculated according to the complete reaction mass ratio of $CuSO_4$ and H_2O, and $m1/Q*\Delta t$ is the moisture content of the gas.

4. Conclusion

The integrated platform for natural gas dewatering and moisture content detection is suitable for natural gas dewatering and detection. The structure is simple and reliable, the water removal efficiency is high, the floor space is small, no other energy is needed, and the natural gas moisture content detection period is short and the precision is high. Easy to implement testing. As a kind of high-heat value and non-polluting clean energy, natural gas is essential to increase its proportion in the energy structure. For the problems of transportation and use of water-containing natural gas, a comprehensive platform for natural gas water removal and moisture detection has been designed. It has a good water removal effect and can also detect the moisture content of natural gas, which has a good promotion value and market application prospects.

References

[1] Fred T. Okimoto, Marco Betting. Twister supersonic separator[C]. 2001.Laurance Reid Gas Conditioning Conference Norman, Oklahoma, 2001, 2

[2] Yan Yang, Chuang Wen, Shuli Wang et al. Theoretical and numerical analysis on pressure recovery of supersonic separators for natural gas dedration [J]. Applied Energy, 2014, 132: 248253.

[3] Chuang Wen, Xuewen Cao, Yan yang. Swirling flow of natural gas in supersonic separators [J].Chemical Engineering and Processing. 2011, 50: 648.

[4] M. M. Malyshkina. The structure of gas namic flow in a supersonic separator of nature gas [J]. High Temperature. Volume 46, Issue 1, pp 69-76, 2008.

[5] Mahmoodzadeh V B, Shahsavand A. Analysis of supersonic separators geometry using generalized radial basis function artificial neural networks[J].Journal of Natural Gas Science and Engineering, 2013, 13:30-41.