Shaoshan 4 Electric Locomotive Pantograph Maintenance Technology

Guoliang Wu[1, a], Lanhao Yu[1, b]

[1]School of Shandong, Shandong University of Science and Technology, Qingdao, 266590, China.

[a]1376090865@qq.com, [b]1130139818@qq.com

Abstract

From the understanding and mastery of the basic structure of the pantograph, after analyzing the dynamic condition of the locomotive, the effective methods and ways to adapt to the pantograph maintenance of the Shaoshan 4 electric locomotive are summarized.Provide experience for the pantograph maintenance of new electric locomotives in the future.

Keywords

SS4,electric locomotive,pantograph,maintenance technology.

1. Introduction

The electrified railway is a modern means of transportation with electric energy as traction power. It consists of two major systems: electric locomotive and traction power supply. The electric locomotive itself does not carry energy and is supplied with electricity from the outside. The device that supplies electric energy to the electric locomotive is the traction power supply system. The pantograph plays an important role between the electric power transmission of the traction power supply system and the current receiving of the electric locomotive. The TSG3- 630/25 single-arm pantograph is commonly installed on the Shaoshan 4 electric locomotive.

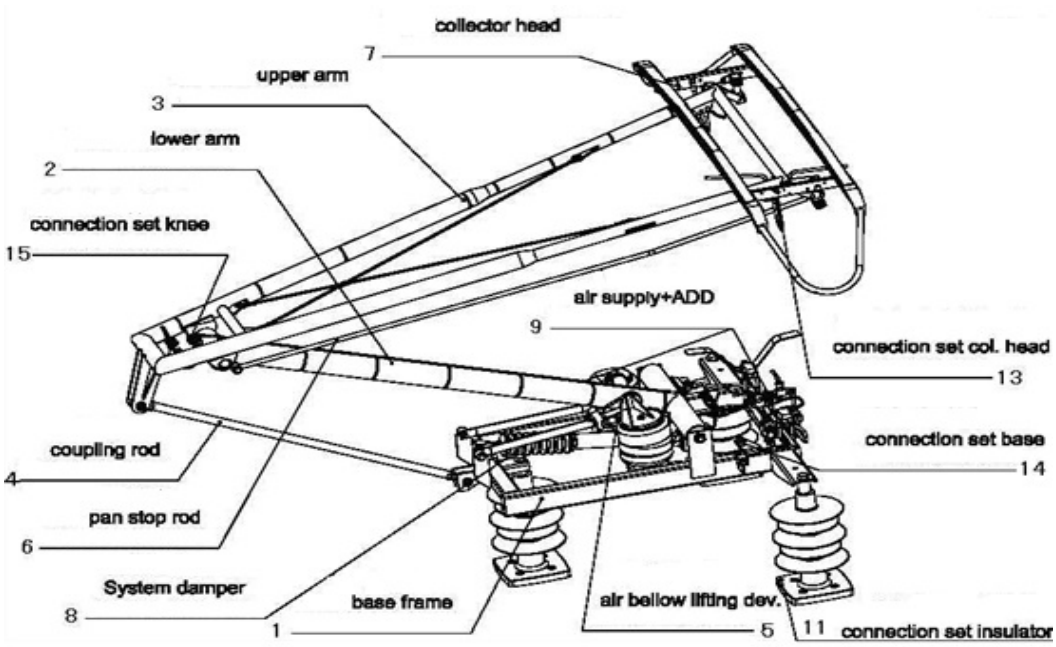

Fig 1. Pantograph schematic

2. Basic Structure and Working Principle

The pantograph is a necessary part of the electrical system from the catenary to the entire train electrical system and the regenerative braking energy. The pantograph device of the pantograph is mounted on the chassis, and the main device is designed and manufactured from a light aluminum alloy material structure. The skateboard is mounted on the U-shaped bow head bracket, and its unique structure makes the skateboard impact on all sides of the locomotive running to achieve the purpose of protecting the skateboard.

The pantograph is generally composed of a bow head, a frame, a chassis and a transmission mechanism, and the frame is composed of a swing rod, an upper arm, a lower arm, a support rod and a balance rod, and the rods are connected by an articulation together. The underframe support frame is fixed on the roof by an insulator, the frame supports the bow by a raising device, and the transmission mechanism acts on the lower arm to realize the lifting action. The pneumatic lifting device is mounted on the base, and the wire rope acts on the sector plate located at the lower part of the lower arm to realize the lifting process. The lower arm, the upper frame and the bow are welded in stainless steel. The carbon slide is mounted on the bow head bracket, and the bow head bracket is hung under the four tension springs, and the two torsion springs are installed between the bow head and the upper frame.

Lifting bow: The process of raising the bow is the process of compressing the air to compress the bowing spring. The size of the throttle port directly controls the speed of the compressed air entering the driving cylinder. When the throttle valve is adjusted, the pressure of the lowering spring is minimum, the pressure required to overcome the force is small, and the difference between the inlet and outlet of the throttle valve is the largest. At this time, the piston in the transmission cylinder moves faster. The rising bow is rapid; as the bow head gradually rises, the pressure of the lowering bow spring gradually increases, and the air pressure required to overcome the force gradually increases. Therefore, the air pressure difference of the throttle valve port gradually decreases, entering the cylinder. The airflow gradually slows down and the speed of the bow is gradually slowed down. This achieves the fast and slow motion requirements of the pantograph, which reduces the impact and vibration on the catenary.

Down bow: When the bow is lowered, the electro-pneumatic valve loses power, and the compressed air in the drive cylinder is discharged to the atmosphere through the throttle valve and the electro-pneumatic valve. At the beginning of the bow lowering, the air pressure in the transmission cylinder is larger, the force acting on the upper side of the quick discharge valve is greater than the force generated by the spring below the fast discharge valve, the valve port of the quick discharge valve is opened, and the compressed air in the transmission cylinder passes through the valve port of the quick discharge valve. Discharge to the atmosphere, allowing the bow of the pantograph to quickly disengage from the network. As the air pressure in the drive cylinder gradually decreases, the valve of the quick discharge valve closes under the action of the spring inside the quick discharge valve, and the residual gas in the cylinder is gradually discharged from the throttle valve port, and the speed of the pantograph is slowed down. This ensures that the bow quickly disengages from the contact net to avoid arcing, which then becomes a slow decline and does not cause harmful effects on the pantograph chassis and the roof.

3. Analysis of Common Causes of Pantograph Failure

3.1. Static Contact Pressure Is Too Small

When the contact pressure is too small, the contact resistance is increased, the power loss is increased, and the locomotive is likely to generate off-line and arc during operation, thereby causing an increase in electrical wear of the contact wires and the slider;

In the electrified railway traction power supply system, the pantograph is detached from the contact wires during the movement. In addition to causing the load current to be discontinuous, this phenomenon affects the flow quality of the locomotive, and an arc phenomenon occurs. In addition to the high-frequency oscillating overvoltage, the arc-shaped arc of the bow will ablate the contact wire and the pantograph slide. The lighter will shorten the service life of the contact wire, and the heavy one will blow the contact wire, causing a major accident.

3.2. Static Contact Pressure Is Too Large

When the contact pressure is too large, the mechanical wear increases, and even the slide plate is partially pulled, thereby causing the contact wire to bounce and pull the arc, so that the bow is scraped.

Scratching a bow means damaging the pantograph of the locomotive due to an abnormality in the contact net. Scratching is a major failure of the catenary and pantograph. If the wrong signal is used to put the electric locomotive into the non-electrical line, the locomotive flight attendant finds that it is easy to cause the bowing without taking the bow-downing measure in time. To prevent the bowing accident, the maintenance department considers two aspects: First, the locomotive is subjected to the quality inspection of the pantograph during the locomotive maintenance operation, and the disease bow is not made out; on the other hand, the contact network status is closely monitored during the locomotive operation. In case of problems, the bow reduction measures should be taken in time, especially when entering and leaving the station, turnouts, shunting operations, phase separation and insulation, and when the weather is bad.

Therefore, the pantograph is required to have a relatively suitable and substantially constant contact pressure within its working height range. This contact pressure is determined by the pantograph mechanical structure and various parameters. Proper static contact pressure allows the pantograph to come into contact with the catenary wire, reduce off-line, overcome the effects of wind and high-speed airflow and mechanical vibrations from the wheel and rail, and ensure good flow characteristics.

3.3. Broken Strands Caused by Improper Cross-Section Shape of the Soft Bow of the Pantograph

The soft connection is woven by many thin wires. Because the number of movements of the EMU is relatively frequent during operation, if the cross-sectional shape and connection mode of the soft connection are improper, the soft connection will be gradually broken. At present, the cross-sectional shape of the soft connection is a flat rectangular structure. Under the same cross-sectional area and aerodynamics, the soft connection of the cross-section structure is subjected to a higher pressure value, and the bending resistance of the structure is analyzed from the viewpoint of material mechanics. The shear stress value is small, and there is a certain stress concentration at the edge portion, which makes the soft connection easy to break. After the soft wire is broken, the temperature of the soft wire and the connecting seat is increased due to the increase of the current per unit area, so that the contact resistance is increased, resulting in a vicious cycle, which causes the soft brittleness of the soft wire to be enhanced.

Change the cross-sectional shape of the soft cross section of the pantograph to change the cross-sectional shape of the soft-connected line from a flat rectangular structure to a circular shape. The windward side of the cylindrical surface faces the positive pressure zone in the direction of the incoming flow, and the positive pressure gradually decreases along the curved surface. Small becomes negative pressure. In the case of the same cross-sectional area and aerodynamics, the soft line of the cross-section structure is subjected to a lower average pressure value. In addition, the bending and shearing allowable stress values of the structure are higher, and the soft connection is not easily broken.

4. Pantograph Failure Analysis

According to the pantograph copper-based skateboard, the bracket of the skateboard is easy to crack in the installation slot. The main reason is that the manufacturer excavates the installation slot and slot in the bottom of the stainless steel skateboard bracket in order to facilitate the installation of the copper-based sliding screw. After that, the force structure of the skateboard bracket is destroyed, and stress concentration is easily generated at the opening. When the pantograph slide is hit by the hard point of the contact net, the slide bracket is easily cracked from the mounting groove to the top due to the TSG3/TSGC receiving power. When the bow is in the bowing state, the rising bow spring is in a stretched state, and when the temperature changes relatively, the breakage is likely to occur.

5. Pantograph Maintenance Method

The bow head and the contact net wire form a pair of friction couplers, and the off-line rate is reduced to ensure reliable electrical contact, and a certain contact pressure must be maintained there between - static contact pressures (one of the main technical parameters of the pantograph). The static contact pressure of the pantograph is related to the mass and extension length of the bow spring, the height of the sector plate adjusting screw and the bearing of each hinge. To this end, we are based on this position, do our best to use the existing conditions, starting from the most fundamental basis, that is, the maintenance technology and maintenance quality of each component: we carefully clean the disassembled components. To ensure adequate cleanliness. The appearance of the lifting bow spring is checked, and cracks, deformations and other damages are not allowed. The free height is measured to meet the specified technical dimensions; the bearings of each hinge part are carefully inspected, and there shall be no strain, crack, collapse, electric corrosion and serious Wear and so on. If the requirements are not met, replace the above parts and apply appropriate amount of grease to each bearing. In terms of adjustment, a set of methods for comprehensively adjusting the static contact pressure of the pantograph is summarized from the long-term work, that is, the pantograph is at the same height, and the inclination of the pressure curve is related to the height of the adjusting screw on the sector plate. The screw is low and the curve is tilted to the right, otherwise it is tilted to the left. The static contact pressure of the pantograph is related to the stretched length of the lift bow spring. The tensile length is long and the rated static contact pressure is large, and vice versa. During the commissioning process, various tool gauges should be used correctly, and the height of the adjustment screws and the two liters on the two sector plates should be used. The elongation of the bow spring is carefully and repeatedly measured to ensure the accuracy of each size.

After continually exploring, summarizing and summarizing the practice, I finally found a more effective method to back up with a solid theoretical basis. In the later work, this repair technology can quickly and better repair more. Qualified pantograph.

References

[1] Liu Youmei Railway High Speed and Sustainable Development of Electric Locomotives and Urban Rail Vehicles.2004(5):15-17.

[2] China Electrification Bureau Group Co., Ltd. Electrified Railway Contact Network. China Electric Power Press. 2004:337-395.

[3] Zhang Weihua, Shen Zhiyun. Study on the dynamics of pantographs. Journal of the China Railway Society, 1993, 15(1): 23-30.

[4] Zhao Shudong, Liu Youmei. Lushan 8 electric locomotive [M]. Beijing: China Railway Publishing House, 1998.

[5] Huang Xicai. Development of the high-speed railway pantograph in Germany. Shanghai Railway Technology. 1999 (2): 47-49.

[6] Zhang Weihua, Shen Zhiyun. Study on the dynamics of pantographs. Journal of the China Railway Society, 1993, 15(1): 23-30.